TQ KRT2 DS - Adapter BLE Bluetooth

SkyDemon (SD) EXPERIMENTAL

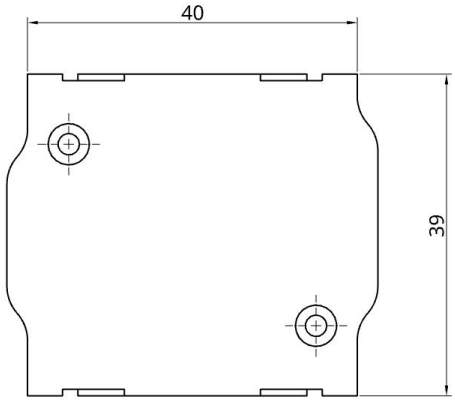

Bluetooth Low Energy Adapter (BLE) for TQ KRT2 VHF Transceiver (Aviation Radio)

This adapter is compatible with **KRT2-S**, **KRT2-F**, and **KRT2-P**. It was developed as an interface between a TQ KRT2 and the SkyDemon (SD) navigation software, facilitating data transfer between the navigation software (SD) and the radio hardware via BLE <-> RS-232 and works together with an EFIS.

The adapter is simply plugged between the existing wiring and the radio, securely attaching to the housing using the Conec Latch system.

No additional power supply required!

The adapter operates on 12 V and 24 V board voltage. An internal mini-fuse (125 mA) is integrated into the housing. The power supply is protected against reverse polarity and short circuits.

No further electrical or mechanical work necessary!

⚠️ Please note: This is a prototype for experimental use only!

1. Radio Configuration

No additional configuration on the radio is required.

2. Connector Pinout

This is an excerpt from the TQ installation manual:

6.9.2 Connector Pin-Configuration

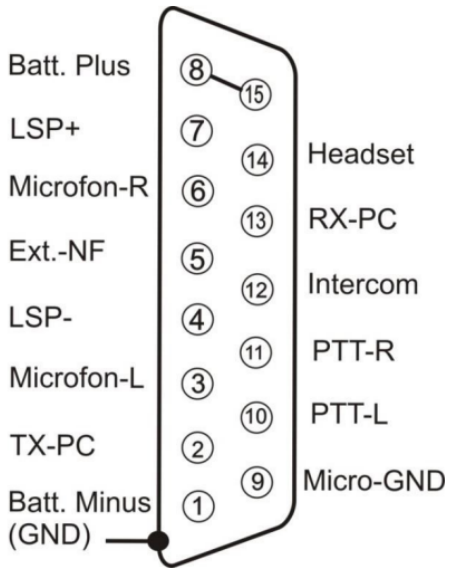

Figure 7: Connector pinout

← Pin 13 of the connector serves as the data input from the EFIS.

3. Contact Information

For issues, questions, feedback, or positive experiences, please contact:

LayCom Vision GmbH - SD-Link
Michael Hoffmann
Chausseestr. 46
D-15518 Rauen

Germany
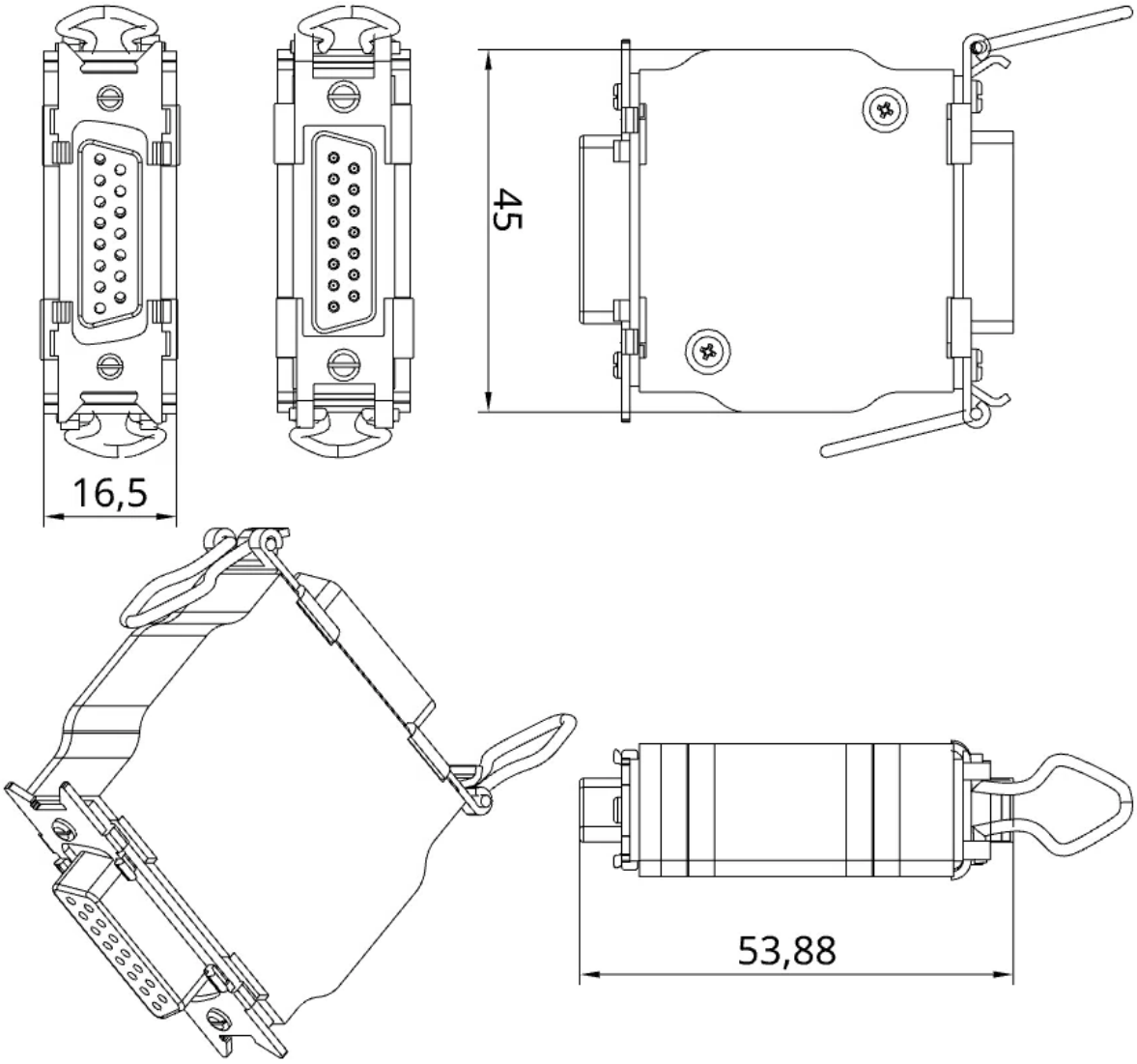
Email: info@sdlink.de
Phone: +49 3361 710253